XPU Series

wheel diameter × wheel width 125 x 50mm

EAN

YJ-12036405201103

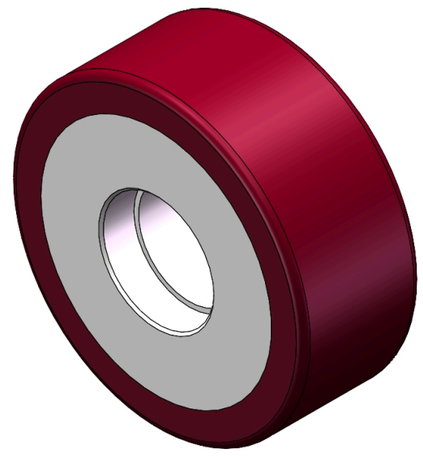

Picture may differ from original product

Drawings are for reference only and may differ from the product

Technical Data

◉ Metric ○ Imperial

Wheel Diameter(D)	125mm
Wheel Width(T2)	50mm
Wheel Bearing	Without Bearing
Axle Bore(d)	
Axle Bore(S)	47mm
Bearing Bore Depth(t)	14mm
Hardness Of Tread	92±5° Shore A
Load Capacity (Dynamic)	600kgs
Load Capacity (Static)	975kgs
Temperature	-20°C to +70°C
Electrical Conductivity	N/A
Anti-Static	N/A
Weight	2.67kgs
Standard	ISO22883

Advantages at a glance

Rolling Resistance	●●●○○
Operating Noise	●●●●○
Floor Surface Preservation	●●●●○

2D Dimensional Drawing of Single Wheel

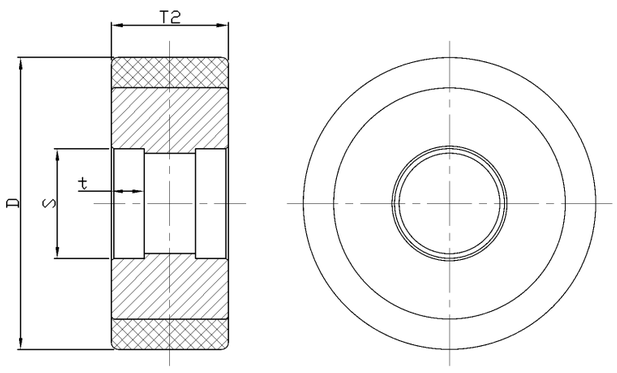

* For any deviation between metric and imperial spec, please refer to the metric spec.

© Copyright 2026 DershengInternational www.dersheng.com