XPU Series

Wheel Diameter × Wheel Width 150 x 50mm

EAN

YJ-12036406200203

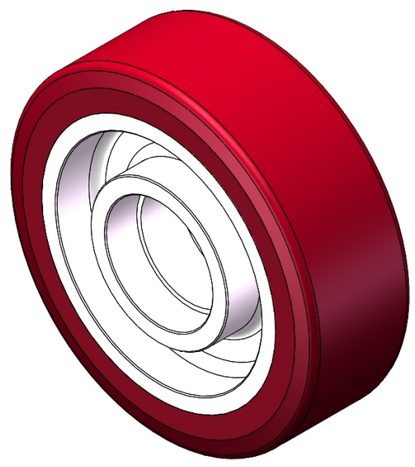

Picture may differ from original product

Drawings are for reference only and may differ from the product

Technical Data

◉ Metric ○ Imperial

Wheel Diameter(D)	150mm
Wheel Width(T2)	50mm
Wheel Bearing	Without Bearing
Axle Bore(d)	—
Axle Bore(S)	52mm
Bearing Bore Depth(t)	15.3mm
Hub Lenth(T1)	50mm
Hardness Of Tread	92±5° Shore A
Load Capacity (Dynamic)	750kgs
Load Capacity (Static)	1125kgs
Temperature	-20°C to +70°C
Electrical Conductivity	N/A
Anti-Static	N/A
Weight	2.39kgs
Standard	ISO22883

Advantages at a glance

Rolling Resistance	● ● ● ○ ○
Operating Noise	● ● ● ● ○
Floor Surface Preservation	● ● ● ● ○

2D Dimensional Drawing of Single Wheel

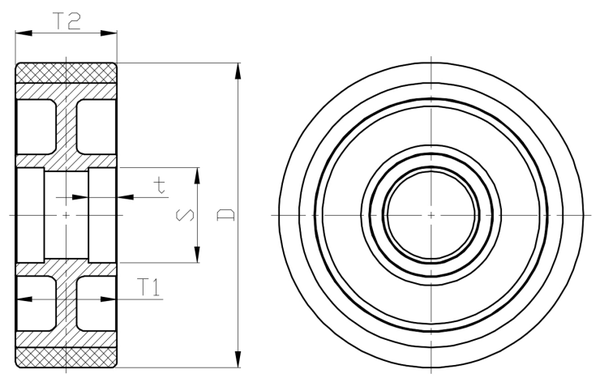

* For any deviation between metric and imperial spec, please refer to the metric spec.

© Copyright 2026 DershengInternational www.dersheng.com