XPU Series

Wheel Diameter × Wheel Width 150 x 50mm

EAN

YJ-12036406200203

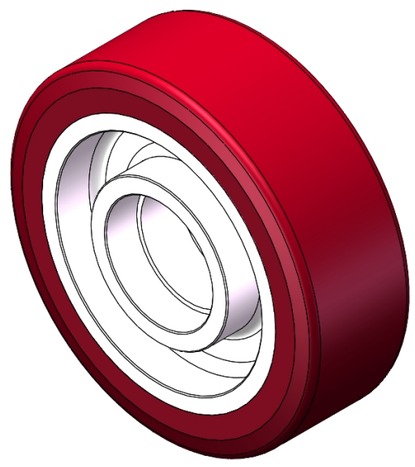

Picture may differ from original product

Drawings are for reference only and may differ from the product

Technical Data

◉ Imperial ○ Metric

Wheel Diameter(D)	6 "
Wheel Width(T2)	2 "
Wheel Bearing	Without Bearing
Axle Bore(d)	—
Axle Bore(S)	1-15/16 "
Bearing Bore Depth(t)	5/8 "
Hub Lenth(T1)	2 "
Hardness Of Tread	92±5° Shore A
Load Capacity (Dynamic)	1653lbs
Load Capacity (Static)	2480lbs
Temperature	-4°F to +158°F
Electrical Conductivity	N/A
Anti-Static	N/A
Weight	5.3lbs
Standard	ISO22883

Advantages at a glance

Rolling Resistance	● ● ● ○ ○
Operating Noise	● ● ● ● ○
Floor Surface Preservation	● ● ● ● ○

2D Dimensional Drawing of Single Wheel

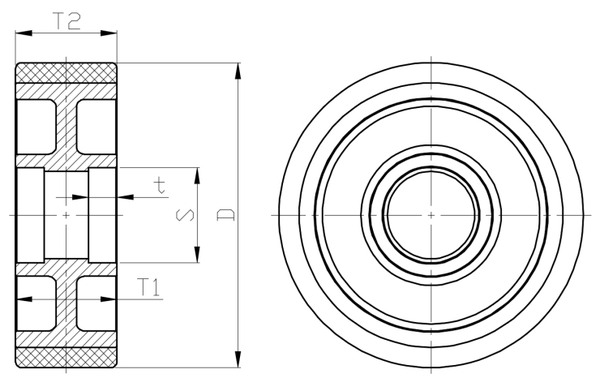

* For any deviation between metric and imperial spec, please refer to the metric spec.

© Copyright 2026 DershengInternational www.dersheng.com