XPU Series

Wheel Diameter × Wheel Width 85 x 93mm

A

YJ-12036443380101

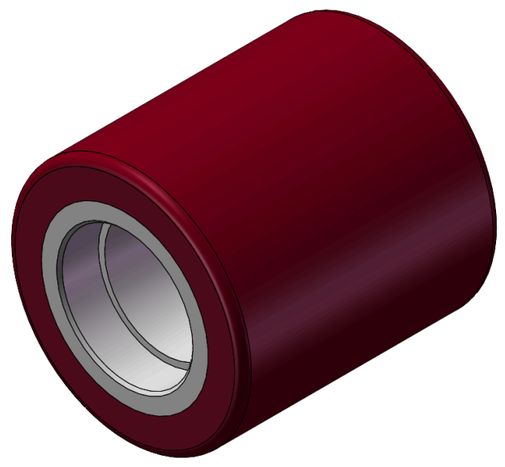

Picture may differ from original product

Drawings are for reference only and may differ from the product

Technical Data

◉ Imperial ○ Metric

Wheel Diameter(D)	3-7/16 "
Wheel Width(T2)	3-11/16 "
Wheel Bearing	Without Bearing
Axle Bore(d)	—
Axle Bore(S)	1-7/8 "
Bearing Bore Depth(t)	9/16 "
Hub Lenth(T1)	—
Hardness Of Tread	92±5° Shore A
Load Capacity (Dynamic)	1499lbs
Load Capacity (Static)	2249lbs
Temperature	-4°F to +158°F
Electrical Conductivity	N/A
Anti-Static	N/A
Weight	2.9lbs
Standard	ISO22883

Advantages at a glance

Rolling Resistance	●●●○○
Operating Noise	●●●●○
Floor Surface Preservation	●●●●○

2D Dimensional Drawing of Single Wheel

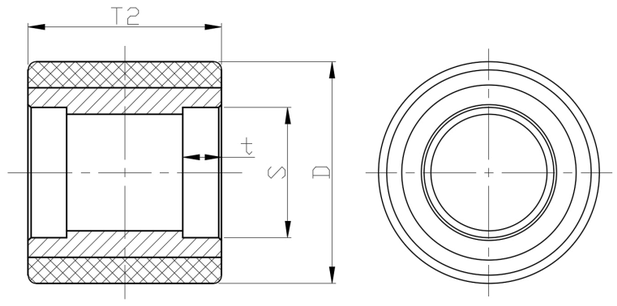

* For any deviation between metric and imperial spec, please refer to the metric spec.

© Copyright 2026 DershengInternational www.dersheng.com