HPU Series

Wheel Diameter × Wheel Width 150 x 40mm

EAN

YJ-12037706186179



Picture may differ from original product

Product descriptions are for reference only. The actual product shall prevail.

Technical Data

◉ Imperial ○ Metric

Wheel Diameter（D）	6 "
Wheel Width（T2）	1-5/8 "
Wheel installation — Hub Lenth (T1)	1-5/16 "
Wheel Mounting Bore Diameter	13/16 "
Keyway Width	1/2 "
Wheel Keyway Depth (H)	15/16
Load Capacity (Static)	2976lbs
Load Capacity at 4 km/h	1984lbs
Load Capacity at 6 km/h	1687lbs
Load Capacity at 10 km/h	1389lbs
Load Capacity at 16 km/h	794lbs
Hardness Of Tread	92±5° Shore A
Temperature	-4°F to +158°F
Tread Pattern	—
Wheel centre/ rim	
Non-Marking	Y
Conductive	N/A
Anti	N/A
Weight	4.5lbs
Standard	ISO22883

Advantages at a glance

Rolling Resistance	● ● ● ● ●
Operating Noise	● ● ● ● ●
Floor Surface Preservation	● ● ● ● ●

2D Dimensional Drawing of Drive Wheel

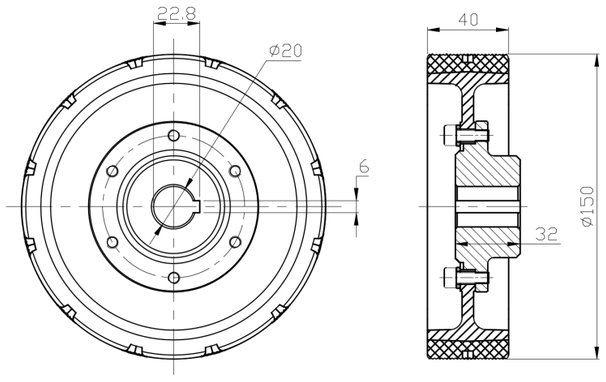

* For any deviation between metric and imperial spec, please refer to the metric spec.

© Copyright 2026 DershengInternational www.dersheng.com